THE INFORMATION CONTAINED IN THIS DRAWING IS THE SOLE PROPERTY OF PLASTICASE ANY REPRODUCTION IN PART OR WHOLE WITHOUT THE WRITTEN PERMISSION OF PLASTICASE IS PROHIBITED.

| REVISIONS | | | |
|---|---|---|---|
| REV. | DESCRIPTION | DATE | APPROVED |
| | | | |
| | | | |
| | | | |

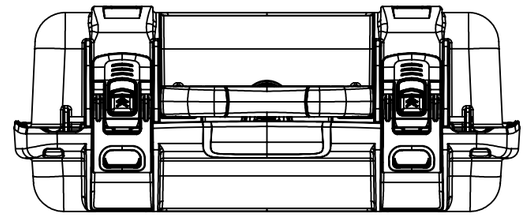

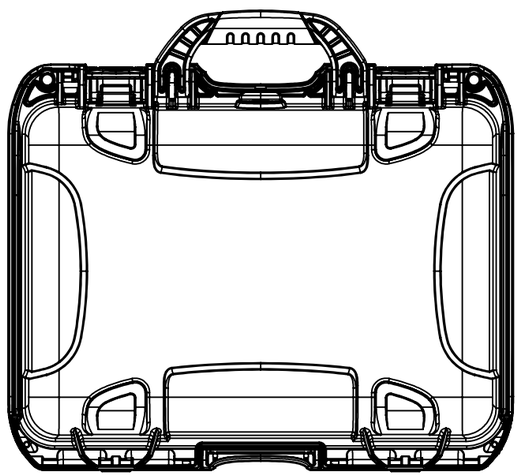

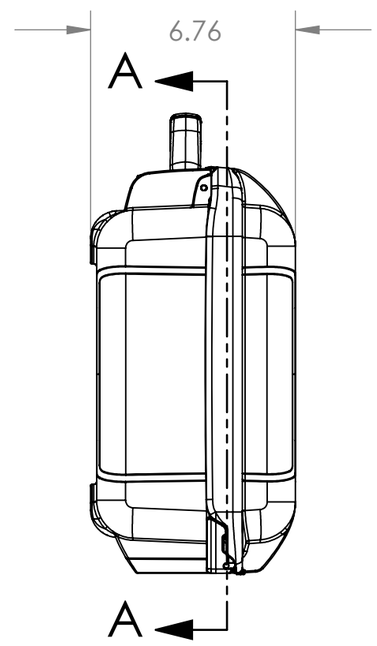


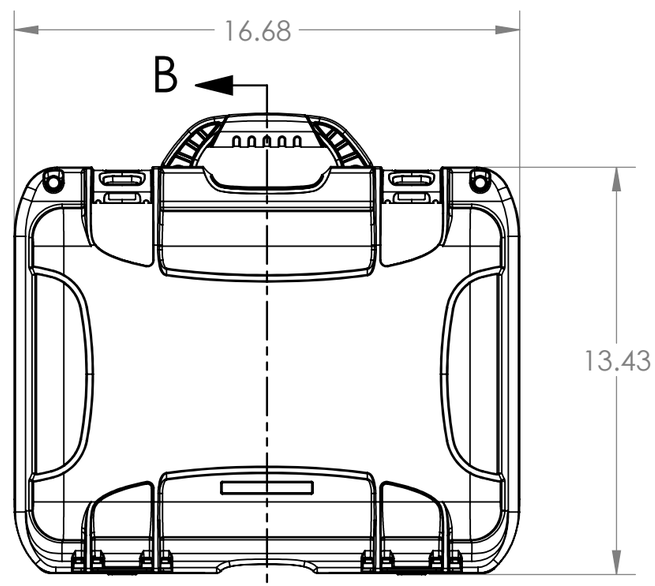


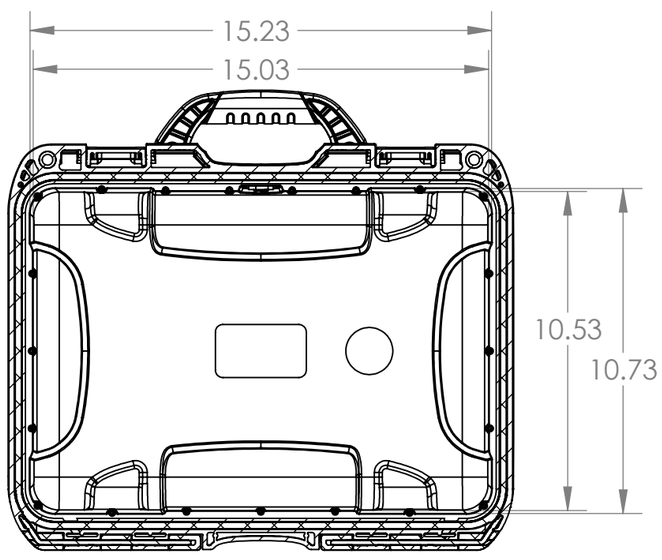


SECTION A-A

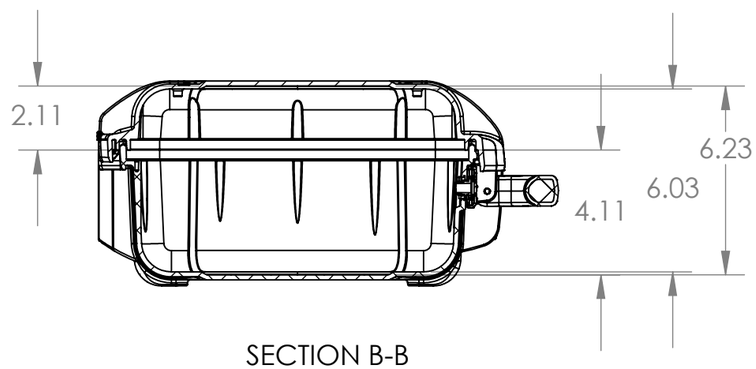


SECTION B-B

| NANUK 920 Specifications | |
|---|---|
| Case Weight Empty | 5.0lbs / 2.3kg |
| Interior Length | 15.03" / 381mm |
| Interior Width | 10.53" / 267mm |
| Interior Height | 6.23" / 157mm |
| Interior Lid Depth | 2.11" / 53mm |
| Interior Base Depth | 4.11" / 104mm |
| Exterior Length | 16.68" / 424mm |
| Exterior Width | 13.43" / 340mm |
| Exterior Height | 6.76" / 173mm |
| Master Pack Qty. | 4 |
| Master Pack Wt. | 28.5lbs / 12.93kg |
| Max Buoyancy | 40lbs / 18.14kg |

PARTS LIST

UNLESS OTHERWISE SPECIFIED DIMENSIONS ARE IN INCHES

MATERIAL

FINISH --

DO NOT SCALE DRAWING

CAD GENERATED DRAWING, DO NOT MANUALLY UPDATE

| APPROVALS | | DATE |
|---|---|---|
| DRAWN | S.C. | 04/03/2020 |
| CHECKED | | |
| RESP ENG | | |
| MFG ENG | | |
| QUAL ENG | | |

PLASTICASE

NANUK 920_R1

SIZE B | DWG. NO. | REV.

SCALE 1:5 | CAD FILE: 920_R1_ASSEMBLY_p.00 | SHEET 1 OF 1